PEM3000 Three-phase Multi-function Meter

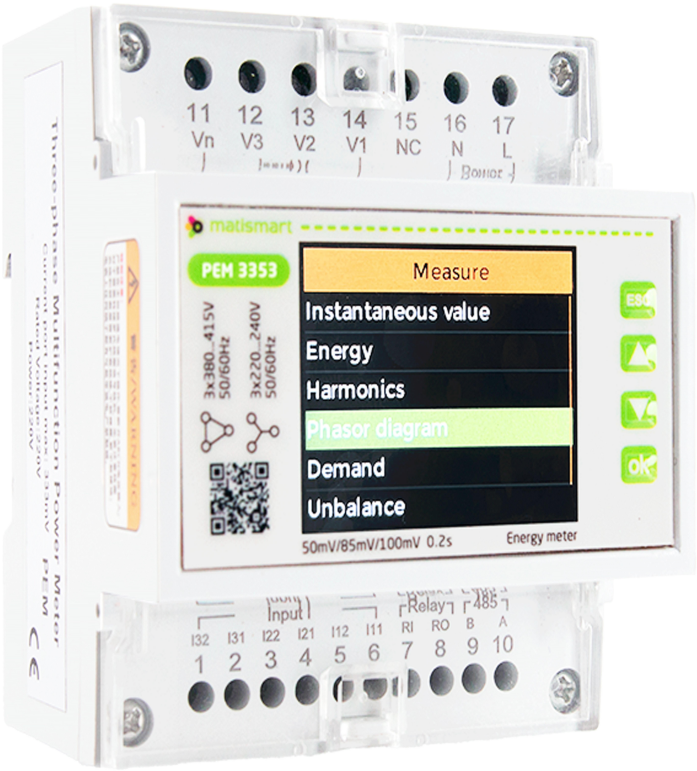

2023-03-24

Shanghai Matis Electric Co., Ltd.

INDEX

1 FUNCTION OVERVIEW 1
2 FUNCTION SELECTION 2
3 PRODUCT MODEL AND NAMING RULES 4
3.1 NAMING RULES 4
3.2 PRODUCT MODEL 5
4 TERMINAL DESCRIPTION 6
4.1 PEM3353-A, PEM3353-D, PEM3353-H 6
4.2 PEM3553-A, PEM3553-D, PEM3553-H 7
5 POWER SYSTEM WIRING INSTRUCTIONS 9
5.1 VOLTAGE TYPE 9
5.2 POWER SYSTEM WIRING 9
5.3 IO PORT 12
5.4 RS485 INTERFACE 14
6 MULTI-TARIFF FUNCTION 15
6.1 MANUAL CONTROL MODE 15
6.2 RTC CONTROL MODE (AUTOMATIC SWITCHING AT SCHEDULED TIME) 15
7 DEMAND 16
7.1 DEMAND CALCULATION METHOD 16
8 PHASE SEQUENCE DETECTION 17
9 OPERATION AND INTERFACE 18
9.1 METER STARTUP INTERFACE 18
9.2 METER SECONDARY MENU SWITCH 18
9.3 MEASUREMENT MENU 20
9.4 SETTING MENU 27
9.5 RESET MENU DISPLAY INTERFACE 36
9.6 DEVICE INFORMATION MENU 37

1 Function Overview

Accurate measurement · Quick installation · Flexible communication

PEM3000 is a high-performance DIN-rail energy meter suitable for PV systems, industrial power distribution, building energy consumption management, etc. It supports single-phase or three-phase systems and has rich electrical parameter measurement functions and flexible communication modes.

☑ Core Functions

- Supports current, voltage, power, energy, power factor, harmonics and other electrical parameter measurements
- Supports active/reactive energy metering, with multi-tariff (up to 6 tariffs) switching function
- Supports Rogowski coil and voltage type CT, fast access through RJ12 interface, no need to remove wires for installation
- Communication mode: RS485 interface, support Modbus-RTU protocol
- A variety of power supply options: 220V AC, 24V DC, 480VAC

2 Function Selection

	PEM3353-A	**PEM3553-A**	**PEM3353-D**	**PEM3553-D**	**PEM3353-H**	**PEM3553-H**
CT connection	Screw-type current terminal	RJ12-type current input	Screw-type current terminal	RJ12-type current input	Screw-type current terminal	RJ12-type current input
CT type	Compatible with voltage transformers and Rogowski coils					
Auxiliary power supply	95-265V AC 110~370V DC	95-265V AC 110~370V DC	18~36VDC	18~36VDC	90-528V AC	90-528V AC
Instantaneous value						
Phase voltage	U1, U2, U3, AVG, U0 (zero sequence voltage)					
Line voltage	U12, U23, U31, AVG					
Current	I1, I2, I3, AVG, In					
Frequency	F1, F2, F3, ∑ (comprehensive)					
Power factor	PF PF1, PF2, PF3, ∑ (comprehensive)					
Fundamental power factor	DPF DPF1, DPF2, DPF3, ∑ (comprehensive)					
Active power	P1, P2, P3, ∑ (sum)					
Reactive power	Q1, Q2, Q3, ∑ (sum)					
Apparent power	S1, S2, S3, ∑ (sum)					
Energy						
Positive active energy	EP1, EP2, EP3, ∑ (total) When the total energy reaches 1.0 x109 kWh, the energy of each phase will be automatically reset to zero					
Negative active energy	EP1, EP2, EP3, ∑ (total) When the total energy reaches 1.0 x109 kWh, the energy of each phase will be automatically reset to zero					
Positive reactive energy	EQ1, EQ2, EQ3, ∑ (total) When the total energy reaches 1.0 x109 kVarh, the energy of each phase will be automatically reset to zero					

Negative reactive energy	EQ1, EQ2, EQ3, ∑ (total) When the total energy reaches 1.0 x109 kVarh, the energy of each phase will be automatically reset to zero
Apparent energy	ES1, ES2, ES3, ∑ (total) When the total energy reaches 1.0 x109 kVah, the energy of each phase will be automatically reset to zero
Tariff energy	ET1, ET2, ET3, ET4, ET5, ET6 When the total energy reaches 1.0 x109 kWh, the energy of each phase will be automatically reset to zero
Harmonics	
Voltage harmonic percentage	Total harmonics (U1, U2, U3), odd total harmonics (U1, U2, U3), even total harmonics (U1, U2, U3) Sub-harmonics 1rd-50th (U1, U2, U3)
Current harmonic percentage	Total harmonics (I1, I2, I3), odd total harmonics (I1, I2, I3), even total harmonics (I1, I2, I3), K factor (I1, I2, I3) Sub-harmonics 1rd-50th (I1, I2, I3)
Voltage harmonic value	Total harmonics (U1, U2, U3) Sub-harmonics 1rd-50th (U1, U2, U3)
Current harmonic value	Total harmonics (I1,I2,I3) Sub-harmonics 1rd-50th (I1,I2,I3)
Phase diagram	
Phase diagram	Phase diagram display between voltage and current
Phase sequence	Voltage, current
Voltage angle	U1, U2, U3
Current angle	I1, I2, I3
Voltage & current angle	UI1, UI2, UI3
Demand	
Demand	Total active power, total reactive power, total apparent power
Max. total active power demand	Max. demand and time
Max. total reactive power demand	Max. demand and time
Max. total	Max. demand and time

apparent power demand						
Imbalance						
Voltage imbalance	Negative sequence, zero sequence					
Current imbalance	Negative sequence, zero sequence					
Max. & Min. value						
Phase voltage	Each phase and average					
Line voltage	Each phase and average					
Current	Each phase and average					
Active power	Each phase and average					
Reactive power	Each phase and average					
Apparent power	Each phase and average					
kWh overload alarm	■					
DI/DO	■		■		■	
Modbus communication	■					

3 Product Model and Naming Rules

3.1 Naming Rules

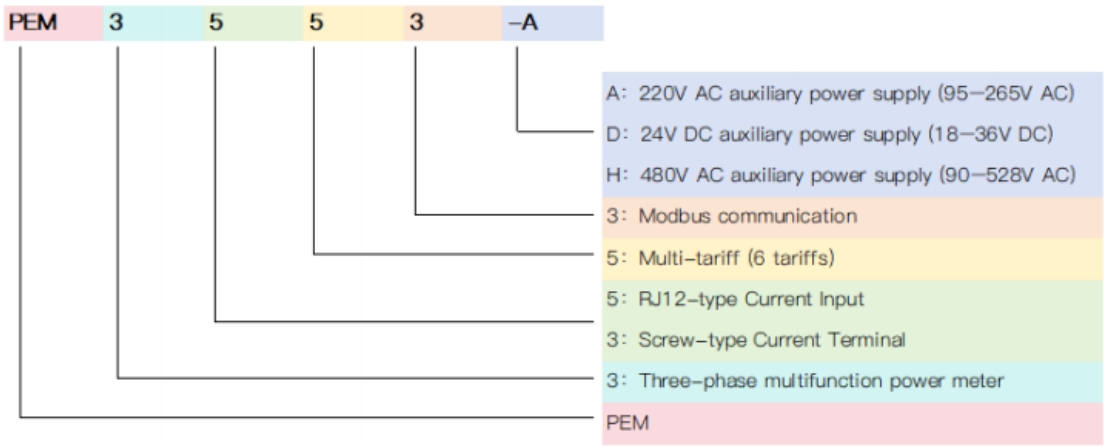

3.2 Product Model

Model	Function Description	Current Port Type	Auxiliary Power Supply
PEM3353-A	Three-phase multi-function energy meter, multi-tariff (6Tariff), multi-parameter measurement, Modbus communication, DI/DO	Screw-type Current Terminal	220V AC auxiliary power supply (95-265V AC)
PEM3553-A	Three-phase multi-function energy meter, multi-tariff (6Tariff), multi-parameter measurement, Modbus communication;	RJ12-type Current Input	220V AC auxiliary power supply (95-265V AC)
PEM3353-D	Three-phase multi-function energy meter, multi-tariff (6Tariff), multi-parameter measurement, Modbus communication, DI/DO	Screw-type Current Terminal	24V DC auxiliary power supply (18-36V DC)
PEM3553-D	Three-phase multi-function energy meter, multi-tariff (6Tariff), multi-parameter measurement, Modbus communication;	RJ12-type Current Input	24V DC auxiliary power supply (18-36V DC)
PEM3353-H	Three-phase multi-function energy meter, multi-tariff (6Tariff), multi-parameter measurement, Modbus communication, DI/DO	Screw-type Current Terminal	480V AC auxiliary power supply (90-528V AC)
PEM3553-H	Three-phase multi-function energy meter, multi-tariff (6Tariff), multi-parameter	RJ12-type Current Input	480V AC auxiliary power supply (90-528V AC)

	measurement, Modbus communication;		

4 Terminal Description

4.1 PEM3353-A, PEM3353-D, PEM3353-H

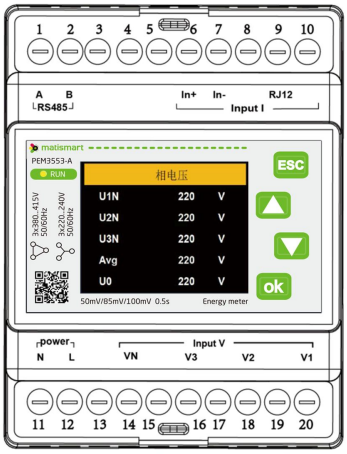

Port No.	Port Name	Functions	Remarks
1	A	RS485 communication A	Data communication
2	B	RS485 communication B	Data communication
3	-	Reserved	Backup port
4	-	Reserved	Backup port
5	-	Reserved	Backup port
6	In+	Phase N current input (+)	Current measurement
7	In-	Phase N current input (-)	Current measurement
8	RJ12	Phase A current input	Current measurement
9	-	Phase B current input	Current measurement
10	-	Phase C current input	Current measurement
11	N	AC power supply (neutral line N)	PEM3353_Input 95-265V AC 110~260VDC

12	L	AC power supply (phase line L)	
11	-	DC power supply (negative pole)	PEM3353_Input 18-36VDC
12	-	DC power supply (positive pole)	
11	N	AC power supply (neutral line N)	PEM3353_Input 90-528VAC
12	L	AC power supply (phase line L)	
13	-	Reserved	Backup port
14	Vn	Phase N voltage input	Voltage measurement
15	-	Reserved	Backup port
16	V3	Phase C voltage input	Voltage measurement
17	-	Reserved	Backup port
18	V2	Phase B voltage input	Voltage measurement
19	-	Reserved	Backup port
20	V1	Phase A voltage input	Voltage measurement

The following terms and definitions apply to this technical requirement.

4.2 PEM3553-A, PEM3553-D, PEM3553-H

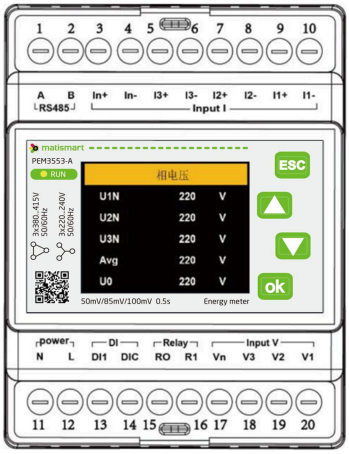

Port No.	Port Name	Functions	Remarks

1	A	RS485 communication A	Data communication
2	B	RS485 communication B	Data communication
3	In+	Phase N current input (+)	Current measurement
4	In-	Phase N current input (-)	Current measurement
5	I3+	Phase C current input (+)	Current measurement
6	I3-	Phase C current input (-)	Current measurement
7	I2+	Phase B current input (+)	Current measurement
8	I2-	Phase B current input (-)	Current measurement
9	I1+	Phase A current input (+)	Current measurement
10	I1-	Phase A current input (-)	Current measurement
11	N	AC power supply (neutral line N)	PEM3553_Input 95-265V AC 110~260VDC
12	L	AC power supply (phase line L)	
11	-	DC power supply (negative pole)	PEM3553_Input 18-36VDC
12	-	DC power supply (positive pole)	
11	N	AC power supply (neutral line N)	PEM3553_Input 90-528VAC
12	L	AC power supply (phase line L)	
13	DI1	DI1 Digital input	Digital input
14	DIC	Digital input common port	Digital input
15	DOC	Relay common port	Relay output
16	DO1	Relay normally open port	Relay output
17	Vn	Phase N voltage input	Voltage measurement
18	V3	Phase C voltage input	Voltage measurement
19	V2	Phase B voltage input	Voltage measurement

20	V1	Phase A voltage input	Voltage measurement

5 Power System Wiring Instructions

5.1 Voltage Type

Power Supply Mode	**Supply Voltage Range**	**Voltage Measurement Range**	**Applicable Models**
External 220V AC power supply	95–265VAC	0–600VAC	PEM3353-A, PEM3553-A
External 24V DC power supply	18–36VDC	0–600VAC	PEM3353-D, PEM3553-D
Main circuit power supply / external 480V AC power supply	90–528VAC	0–600VAC	PEM3353-H, PEM3553-H

5.2 Power System Wiring

Wiring Mode	**Schema Identifier**	**Number of current sensors required**	**Special Instructions**
Three-phase four-wire (4CT)	3P4W_4CT	4 pcs	Phase N current is measured by the current sensor
Three-phase four-wire (3CT)	3P4W_3CT	3 pcs	Phase N current is calculated by the meter
Three-phase three-wire (3CT)	3P3W_3CT	3 pcs	Phase B current is measured by the current sensor
Three-phase three-wire (2CT)	3P3W_2CT	2 pcs	Phase B current is calculated by the meter
Single-phase three-wire	1P3W	According to configuration	
Single-phase two-wire	1P2W	According to configuration	

5.2.1 Wiring Precautions

☑ The wiring mode must be consistent with the internal settings of the meter, otherwise it may cause measurement errors.

⚠ The voltage and current phase sequence must be connected in the order of A-B-C, otherwise the meter will prompt "voltage and current phase sequence is wrong".

🔁 The installation direction of the current sensor must be strictly followed: the current direction arrow must point to the load end, which is consistent with the actual current flow direction.

5.2.2 PEM3353-A, PEM3353-D, PEM3353-H

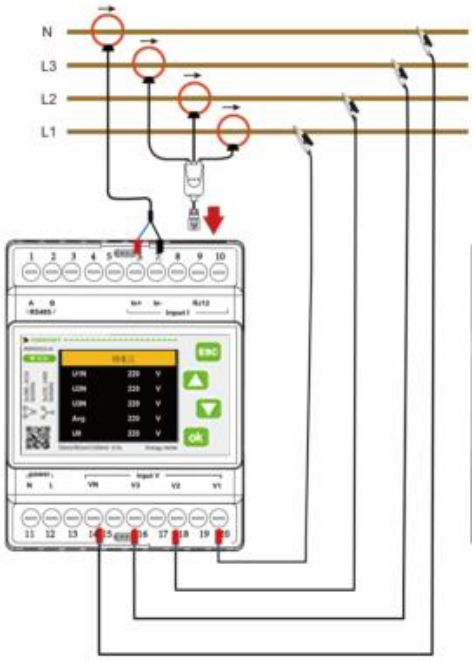

3P4W 4CT

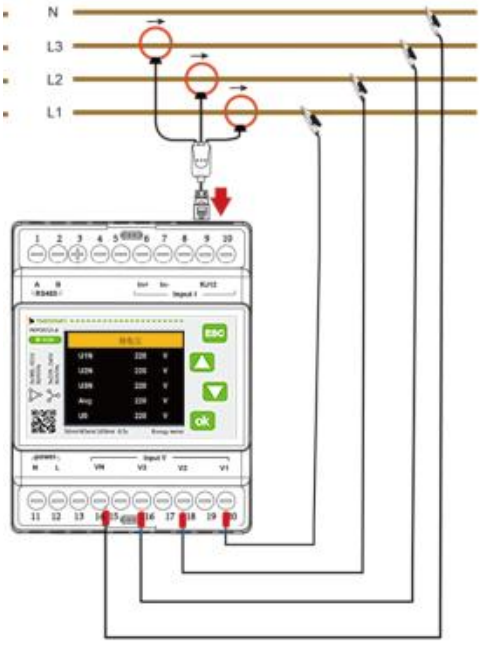

3P4W 3CT

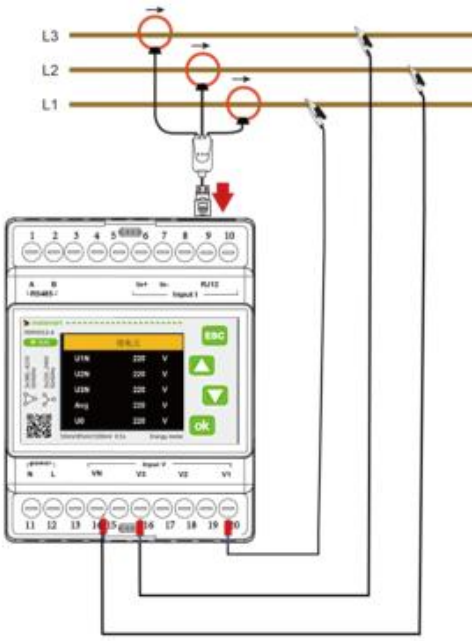

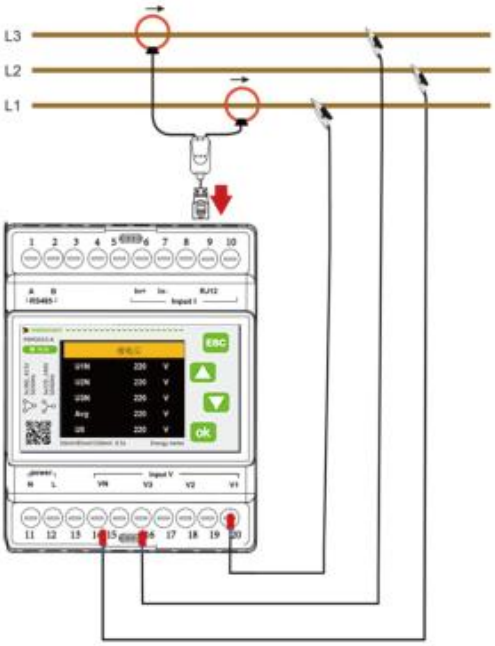

3P3W 3CT

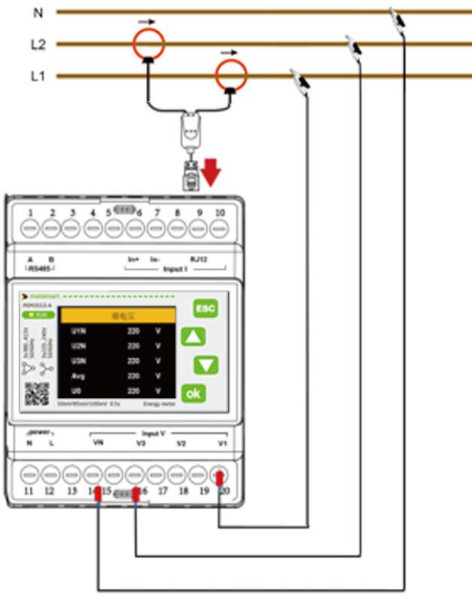

3P3W 2CT

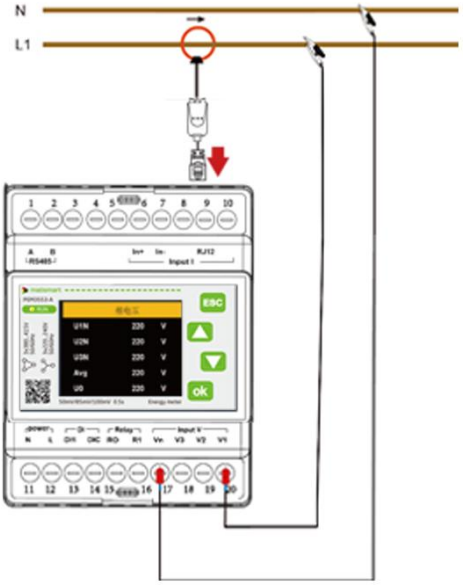

1P3W 2CT

1P2W 1CT

5.2.3 PEM3553-A, PEM3553-D, PEM3553-H

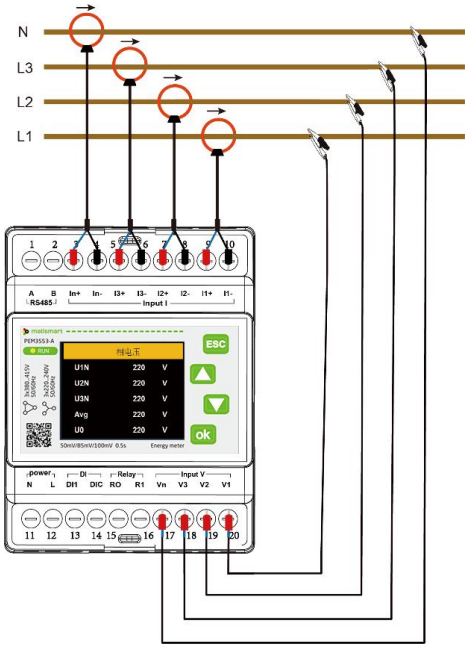

3P4W 4CT

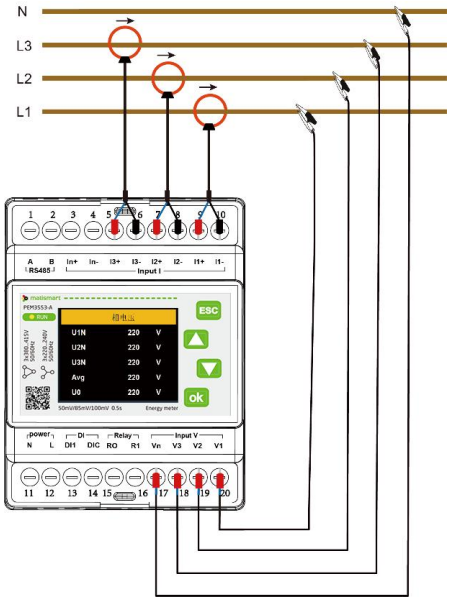

3P4W 3CT

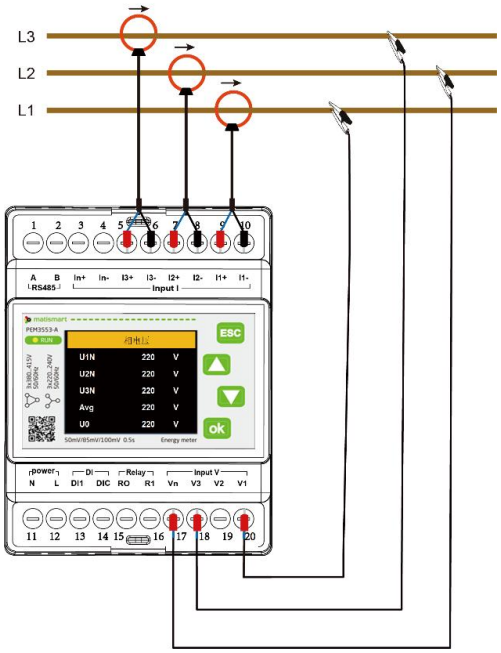

3P3W 3CT

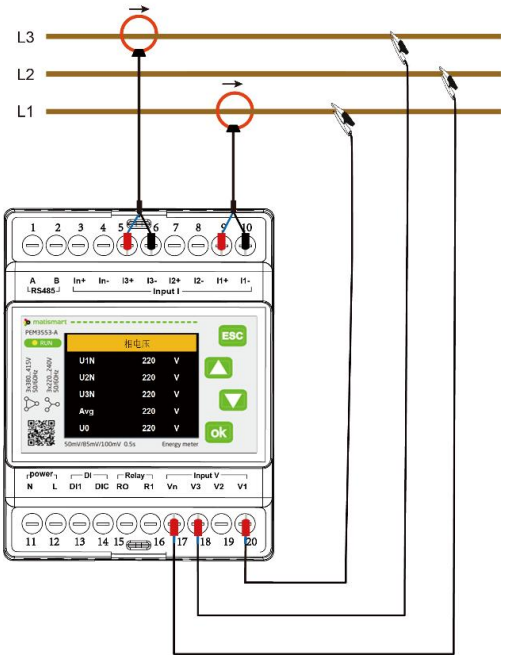

3P3W 2CT

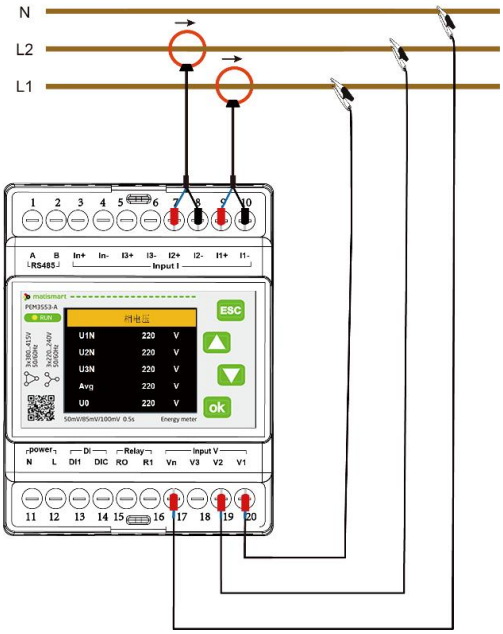

1P3W 2CT

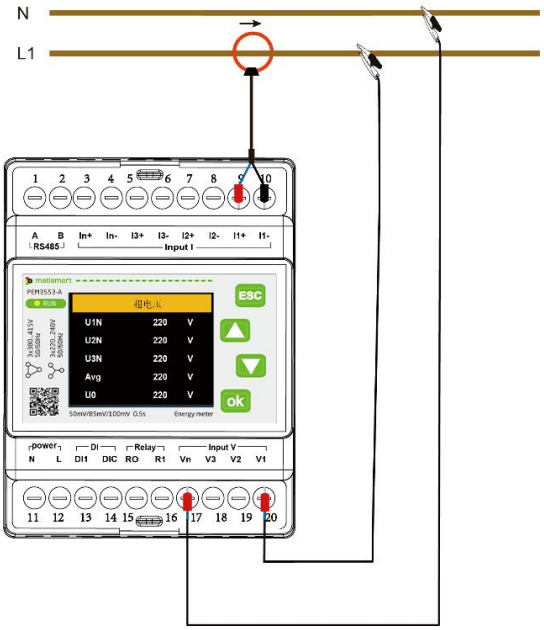

1P2W 1CT

5.3 IO Port

Applicable to PEM3553-A, PEM3553-D, PEM3553-H

5.3.1 Digital Switch Input Description

The meter is equipped with **1 digital input (DI)**, which is connected in passive **dry contact** mode.

- **Terminal marking:**
  - DI1: Digital input terminal
  - DIC: Common terminal
- **Input mode:**
  - Dry contact, no external power supply required.
- **Status reading:**
  - The digital input status can be read via RS485 / Modbus protocol.
  - The meter interface can display the current input status in real time.

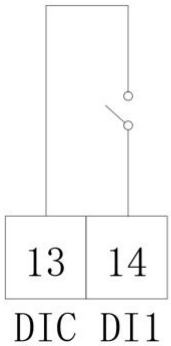

Digital input

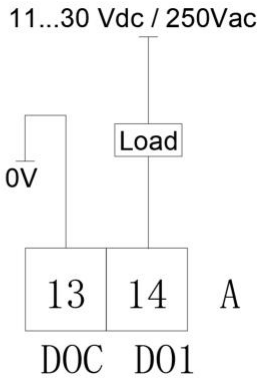

Digital output

5.3.2 Relay Output Description

1. Relay Output Description

The meter is equipped with **1 relay output**, which is a **normally open contact** and is used to control external devices.

- **Terminal marking:**
  - DOC: Common terminal (COM)
  - DO1: Normally open contact (NO)
- **Relay capacity:**
  - Maximum support: 3A @ 30V DC or 3A @ 250V AC
- **Status display:**
  - The meter interface can display the closing status of the relay contacts in real time.

2. Relay Control Mode

The relay supports two control modes, which can be set through the meter operation interface or Modbus commands:

Control Mode	Description
Manual mode	Users can manually control the relay on and off through the meter interface or Modbus commands
Automatic mode	The trigger conditions (such as alarm, over-limit, etc.) can be set, and the meter will automatically control the relay output

Note: Make sure the load connected to the relay is within the rated range to avoid contact damage.

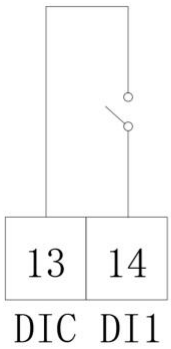

Digital input

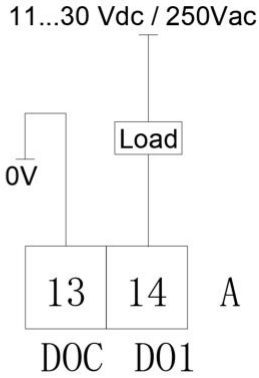

Digital output

5.4 RS485 Interface

The meter is equipped with 1 RS485 communication interface and supports Modbus-RTU protocol.

- It is recommended to use shielded twisted pair cables for connection.
- The communication uses a daisy chain topology.
- In situations where the communication distance is long or the rate is high, it is recommended to connect a 120Ω terminal resistor in parallel at both ends of the daisy chain to ensure stable communication.

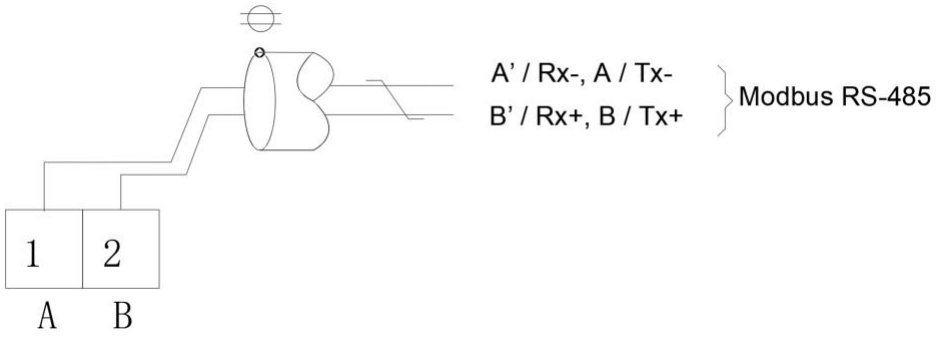

RS485 wiring

6 Multi-tariff Function

The meter supports multi-tariff energy metering function, and up to 6 tariffs (T1~T6) can be set for time-of-use electricity price management.

Tariff switching control mode

The meter supports two tariff switching modes, which can be configured through the meter operation interface or Modbus commands:

Control mode	Description
Manual mode	Manually switch tariffs via meter or Modbus command
RTC mode	Automatically switch tariffs according to the time period set by the real-time clock (RTC)

6.1 Manual Control Mode

- Through the meter interface path:

  Settings → Tariff → Tariff Selection to change tariffs

- Through Modbus commands:

  Use function code 1071 to set the current tariff

6.2 RTC Control Mode (Automatic Switching at Scheduled Time)

- The meter's built-in real-time clock (RTC) automatically switches tariffs according to preset time periods

- Supports **6 time periods (Ta~Tf)**, and any tariff can be specified for each time period (T1~T6)
- Time period and tariff configuration mode:
  - Configurable via meter interface or Modbus commands
  - The time setting uses a **24-hour format**
- **The time period settings need to be incremented in sequence:**
  - Ta is the start time
  - Tb start time must be later than Ta
  - Tc start time must be later than Tb
  - And so on to Tf

7 Demand

The meter provides active power, reactive power, apparent power demand and maximum demand.

The demand calculation method and demand calculation interval can be configured through the meter operation interface or Modbus.

7.1 Demand Calculation Method

The meter supports two demand calculation methods:

- **Fixed / Block Demand:** The power is averaged over a set time interval (e.g. 15 minutes), with each interval being independent.
- **Sliding / Rolling Demand:** Calculate the average power with a smaller time step (such as 1 minute) to reflect more real-time load changes.

Demand Calculation Method	Description
Fixed	The meter calculates and updates the demand at the end of each interval
Sliding	Demand is updated every 1 minute

The demand type and calculation interval are user configurable via the local interface or Modbus protocol.

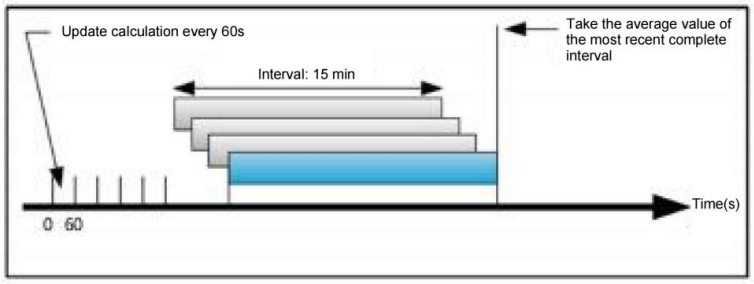

Sliding

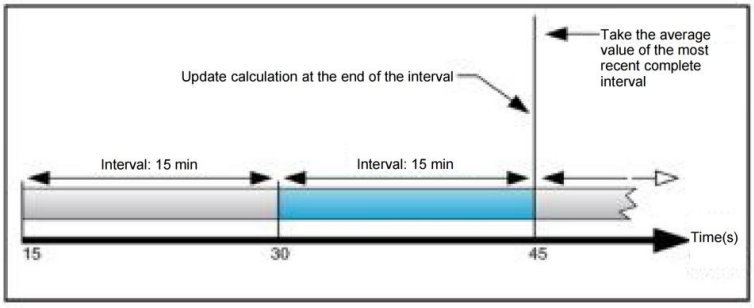

Fixed

8 Phase Sequence Detection

The meter supports phase sequence detection of three-phase voltage and current.

The user can go to the "Measurement > Phase Diagram > Phase Sequence" menu through the meter operation interface to view the current phase sequence status, or read the phase sequence information through Modbus communication to achieve remote monitoring.

Phase Sequence Status Icon	Description
	The phase sequence is correct
	Phase sequence error The channel detected the signal, but the sequence was incorrect
	Phase sequence error Phase loss or signal is too weak

Notice:

The phase sequence detection of voltage and current can only determine whether their respective phase sequences are correct, but cannot ensure the phase correspondence between voltage and current. Therefore, special attention should be paid to ensure the correspondence between voltage and current loops during installation and

wiring.

9 Operation and Interface

This section mainly describes the interface display structure, button functions and combined operation modes of the meter, and introduces the main configuration methods of the device.

The meter panel is equipped with 4 operation buttons, the functions are as follows:

Button Symbol	Description
ESC button (◄)	Used to exit the current interface or cancel the current operation.
Up button (↑)	•In browsing mode: used to switch the display interface. •In setting mode: used to increase the value. •Long press to move the cursor and select the digit to adjust.
Down button (↓)	•In browsing mode: used to switch the display interface. •In setting mode: used to decrease the value. •Long press to move the cursor and select the digit to adjust.
OK button (►)	Used to confirm the current operation or enter the setting interface.

9.1 Meter Startup Interface

When the meter is powered on, it will enter the startup screen by default. After the startup screen lasts for a few seconds, it will automatically jump to the main menu interface.

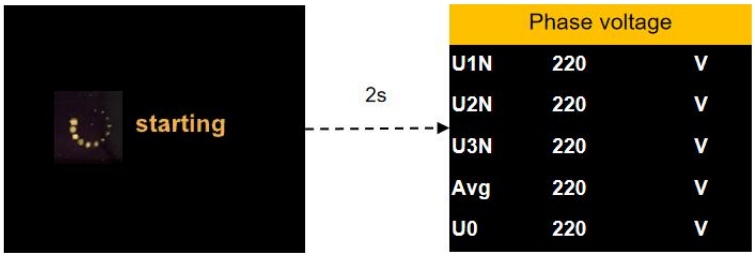

Startup screen Default

9.2 Meter Secondary Menu Switch

There are a total of 4 secondary menus:

- Measurement menu
- Setting menu
- Reset menu
- Device information menu

Users can switch between menus by button operation. The menu structure is shown in the figure below:

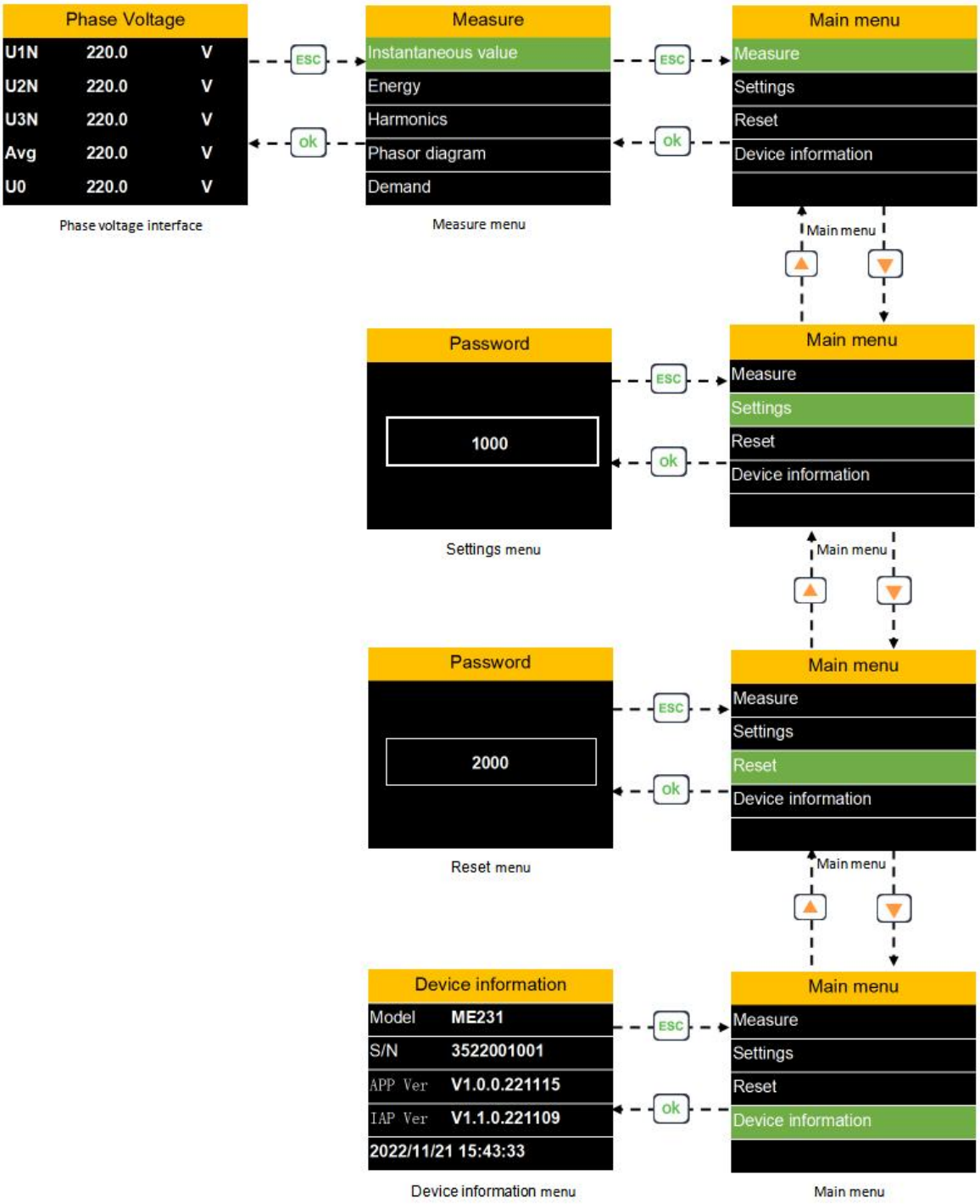

9.3 Measurement Menu

The measurement menu contains the following 7 submenus: instantaneous value, energy, harmonics, phase diagram, demand, imbalance, max. & min. value, which are used to display the measurement data of various electrical parameters.

Press [↑] or [↓] to switch the selected submenu.

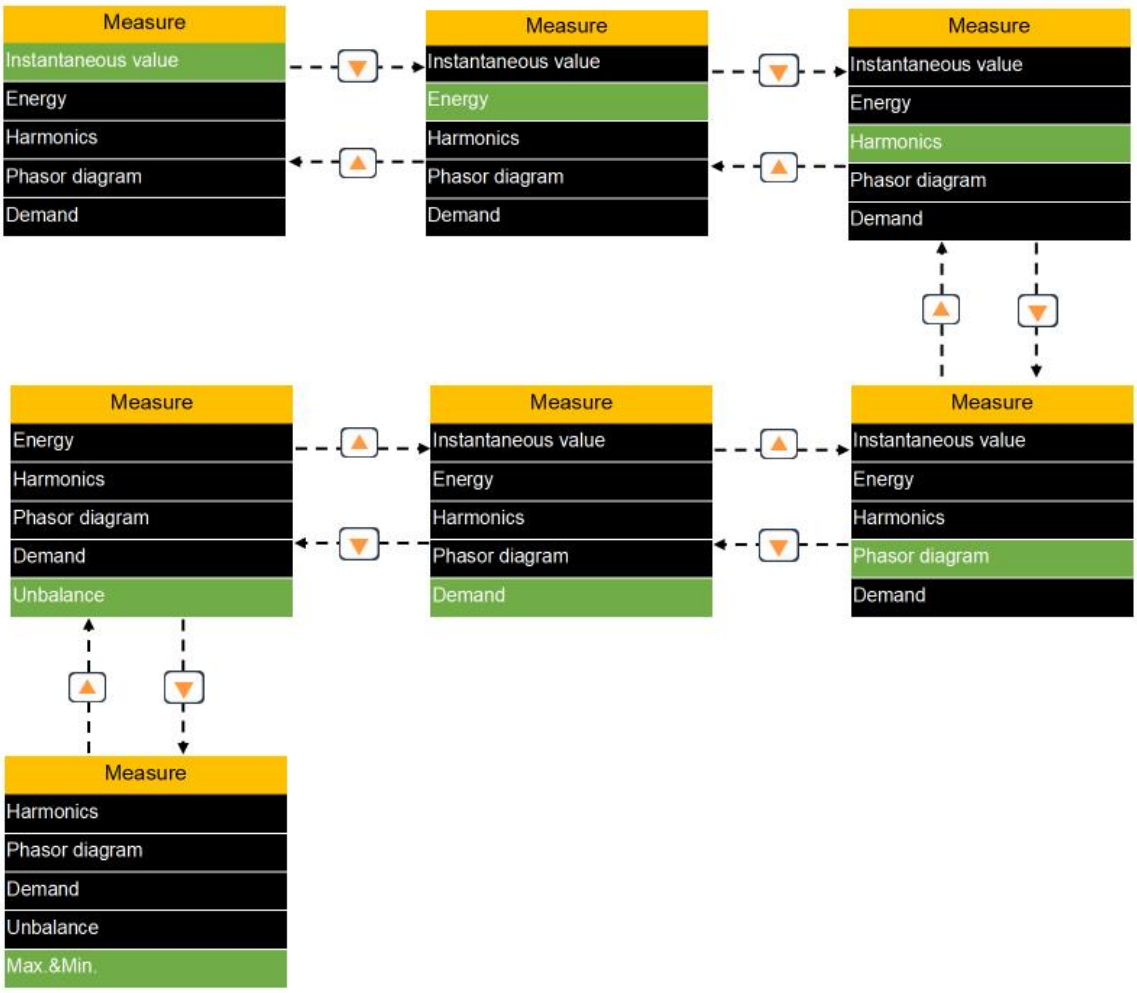

9.3.1 Measurement Menu - Instantaneous Value

Display: voltage, current, power, power factor, frequency, etc.

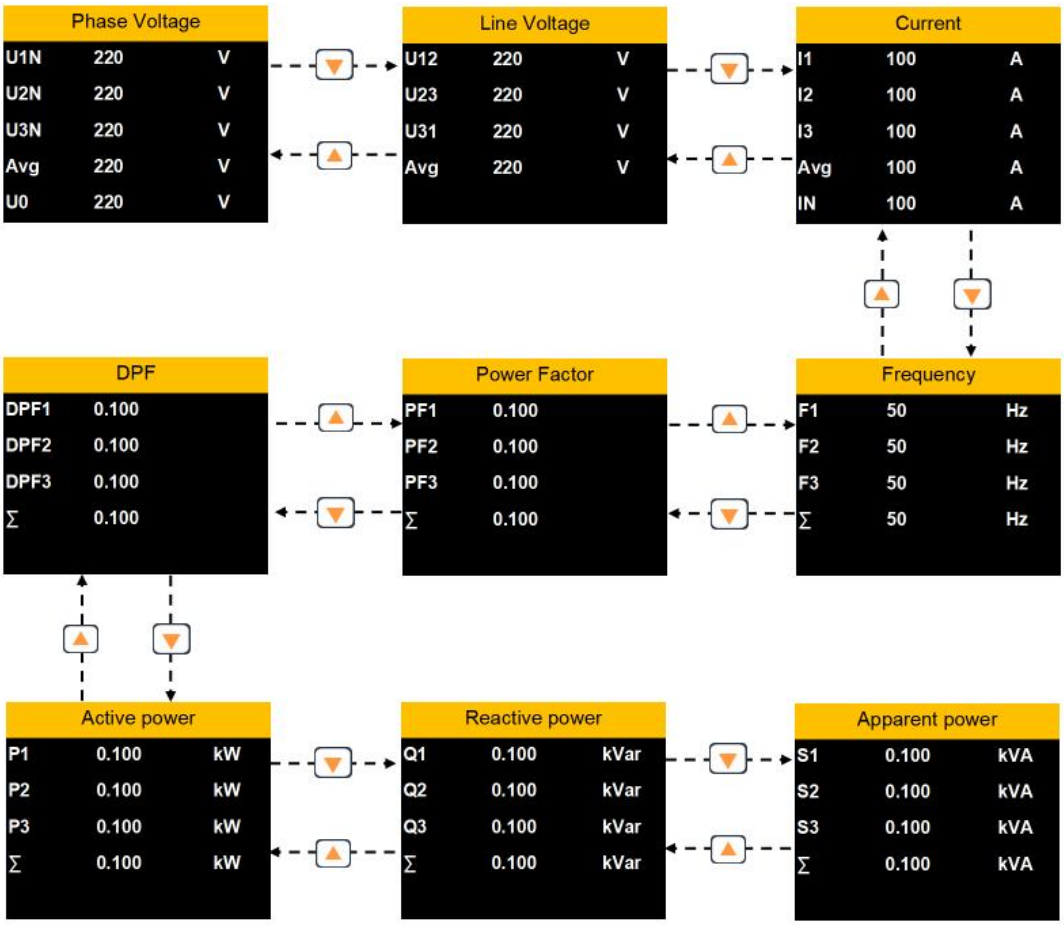

9.3.2 Measurement Menu - Energy

Display: active energy, reactive energy, apparent energy, etc.

9.3.3 Measurement Menu - Harmonics

Display: voltage harmonics, current harmonics, etc.

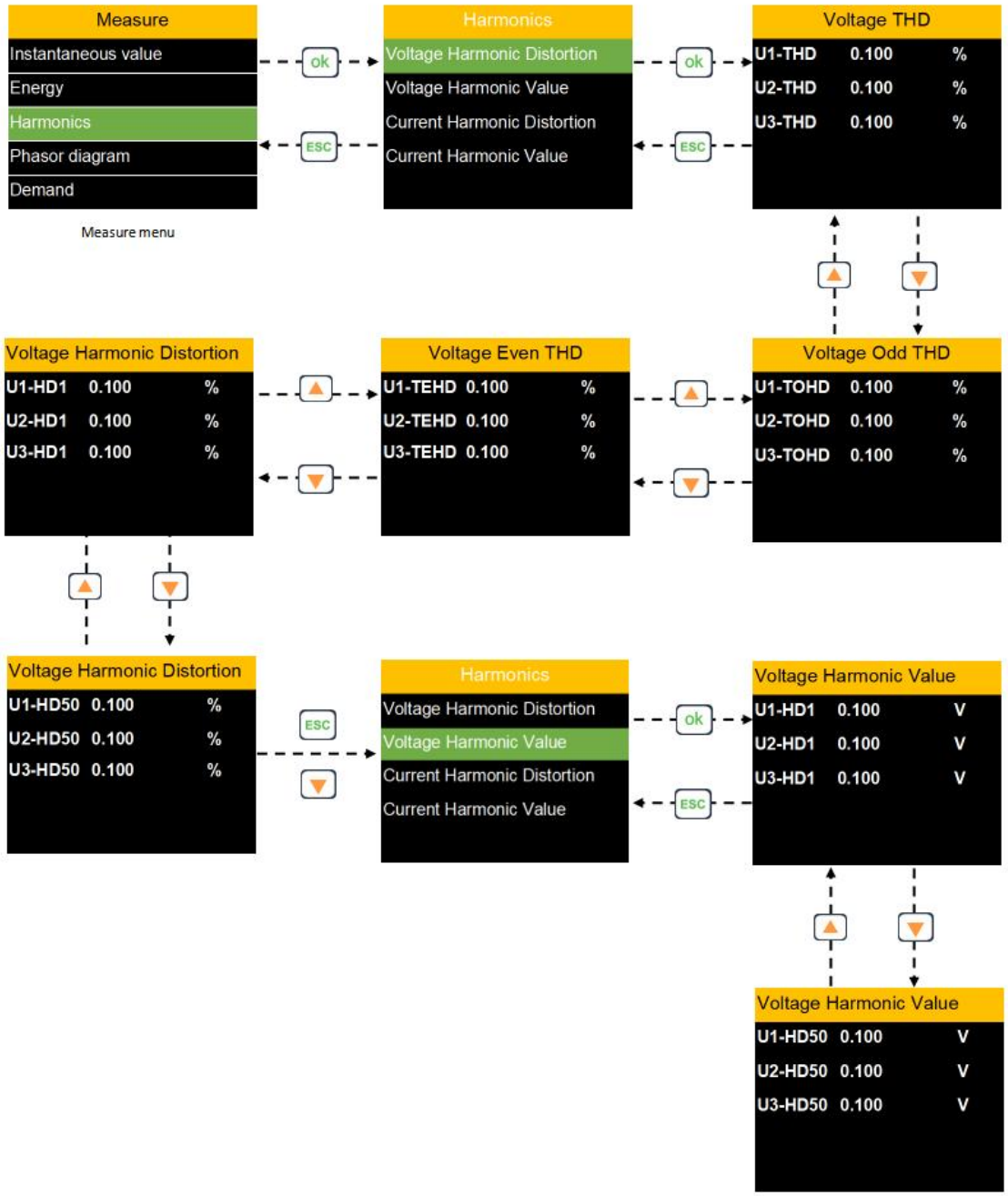

9.3.4 Measurement Menu - Phase Diagram

Display: phase diagram, phase sequence, voltage angle, current angle, etc.

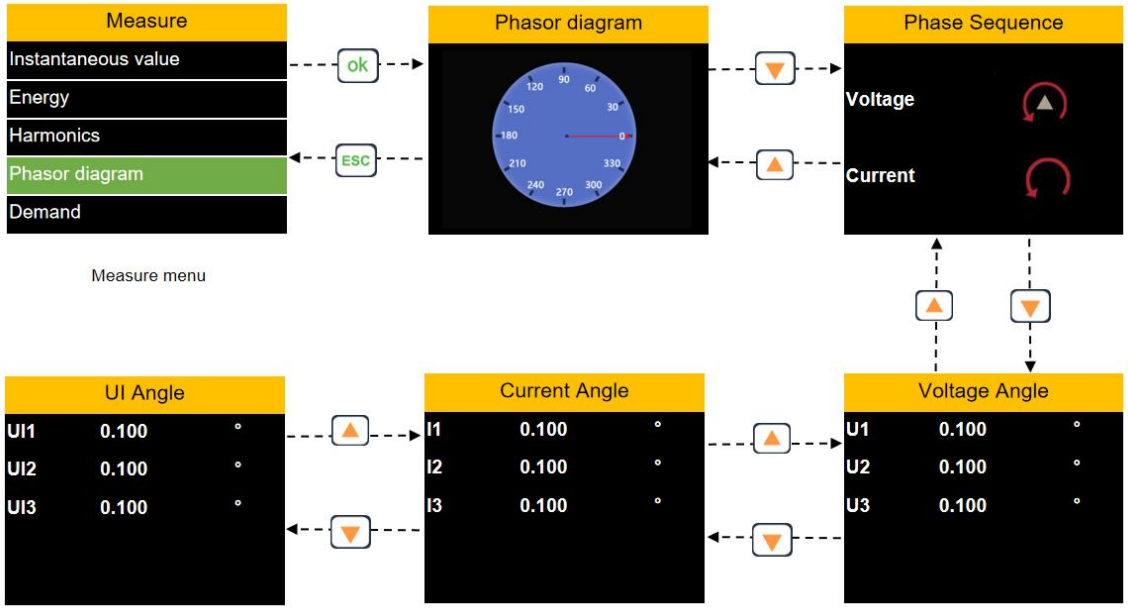

9.3.5 Measurement Menu - Demand

Display: demand, maximum demand, etc.

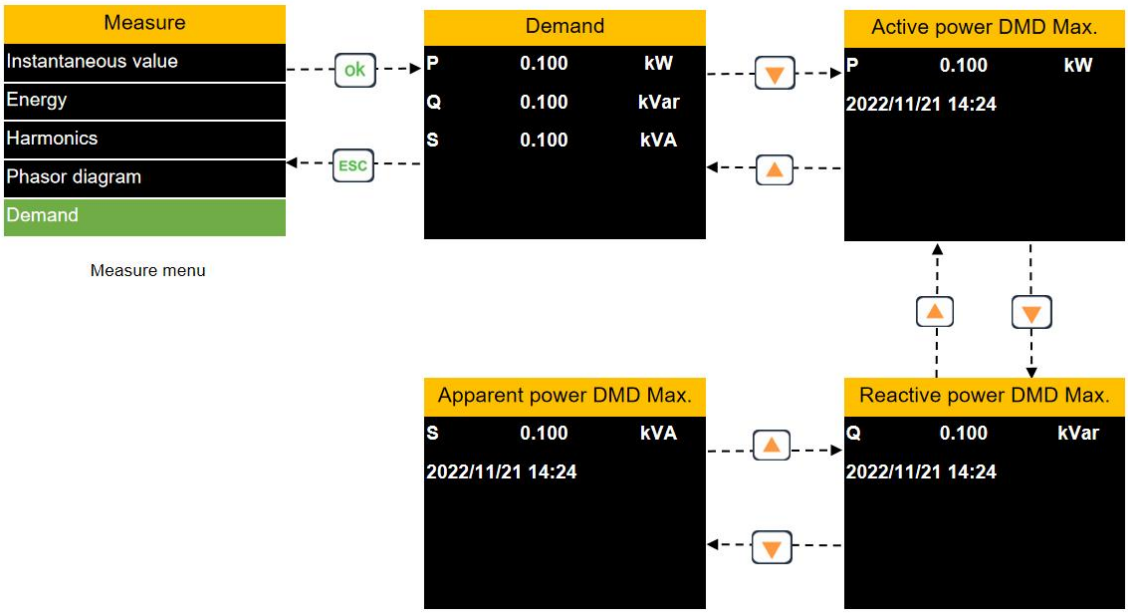

9.3.6 Measurement Menu - Imbalance

Display: voltage imbalance, current imbalance, etc.

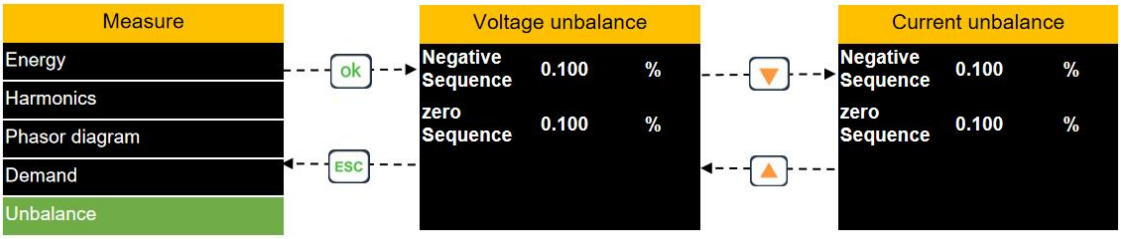

Measure menu

9.3.7 Measurement Menu - Max. & Min. Value

Display: maximum and minimum values of voltage and current.

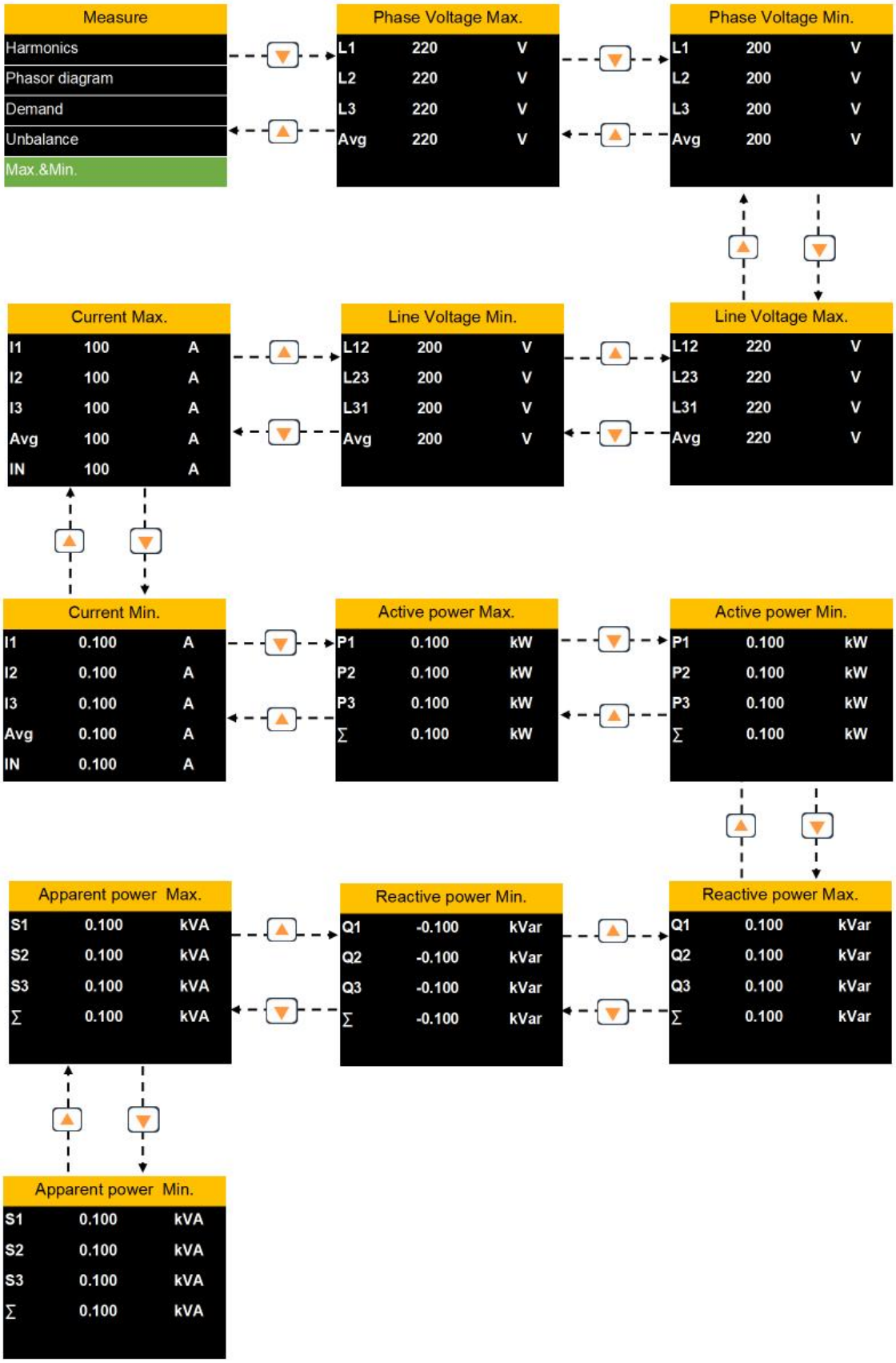

9.4 Setting Menu

The setting menu is used to set:

- Wiring mode
- Current sensor types and ratios
- Voltage transformer ratio
- Communication parameters
- Demand setting
- Backlight control
- Device time
- Password setting, etc.

Before going to the setting page, you need to input the password (default 1000). Operations: Press [OK] to go to the password input interface, use [↑] or [↓] to modify the value, and **long press** [↑] or [↓] to shift the cursor (the current digit flashes).

- The password is correct → Press [OK] to go to the setting page
- Wrong password → Stay on the input page
- Forgot password → Use the last four digits of the device serial number as a temporary password to enter the settings interface

After entering the setup menu, use the [↑] or [↓] to select a submenu and press the [OK] to enter the settings interface.

9.4.1 Setting Menu - Power Grid Parameter

Used to set the following parameters:

Parameters	Configuration Instructions
Wiring mode	3-phase 4-wire-4CT, 3-phase 4-wire-3CT, 3-phase 3-wire-3CT, 3-phase 3-wire-2CT, single-phase
Frequency	50Hz / 60Hz
VT ratio	Range: 1~10000 (primary voltage / secondary voltage)
CT ratio	Range: 1~10000 (primary current/secondary current)

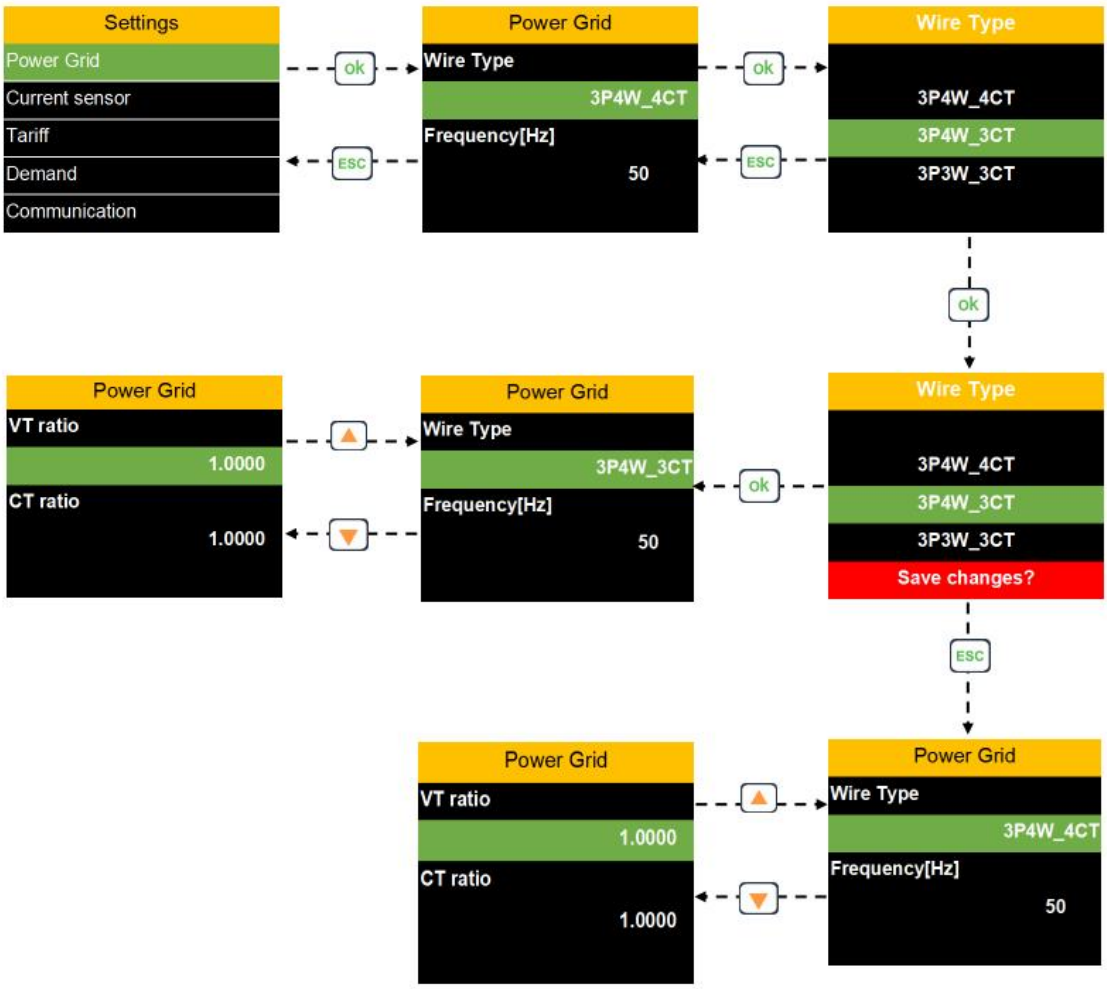

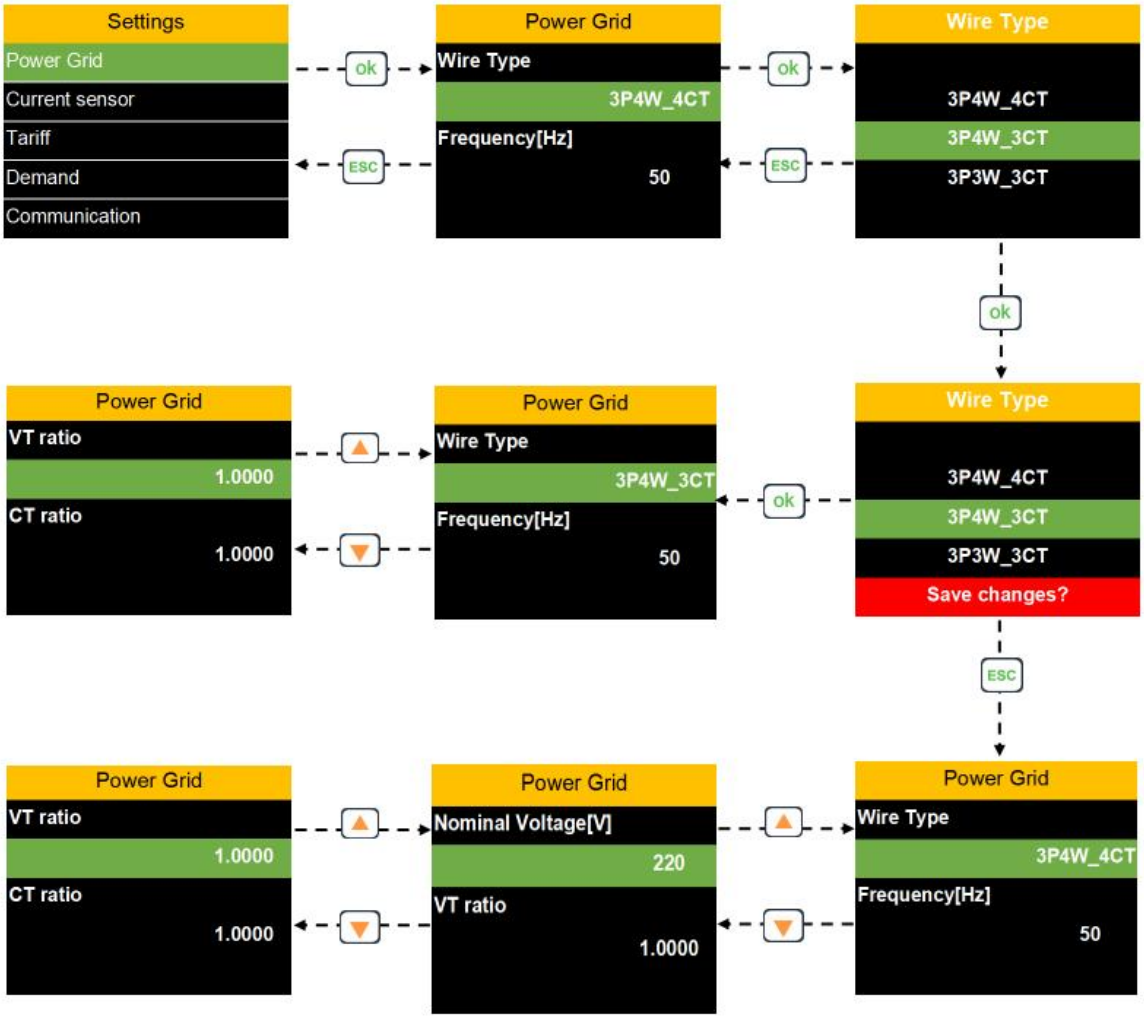

After setting, the system will prompt whether to save the changes. Use [OK] or [ESC] to confirm.

9.4.2 Setting Menu - CT

Set the following parameters:

Parameters	Configuration Instructions
Phase type	I1, I2, I3, In
Sensor type	Rcoil (Rogowski coil), VCT (voltage output CT)
Pri [A]	Primary rated current, range: 1~999999
Sec [mV]	Secondary output voltage, range: 1~99999
Nominal current	Actual measured rated current value, range: 1~99999

Instruction:

For example, using a **85mV/kA@50Hz** Rogowski coil, the initial settings are:

Rcoil Pri = 1000A

Rcoil Sec = 85mV

If you want to measure 2000A, the nominal current is set to 2000A.

After replacing the coil, the transformation ratio parameters must be reset.

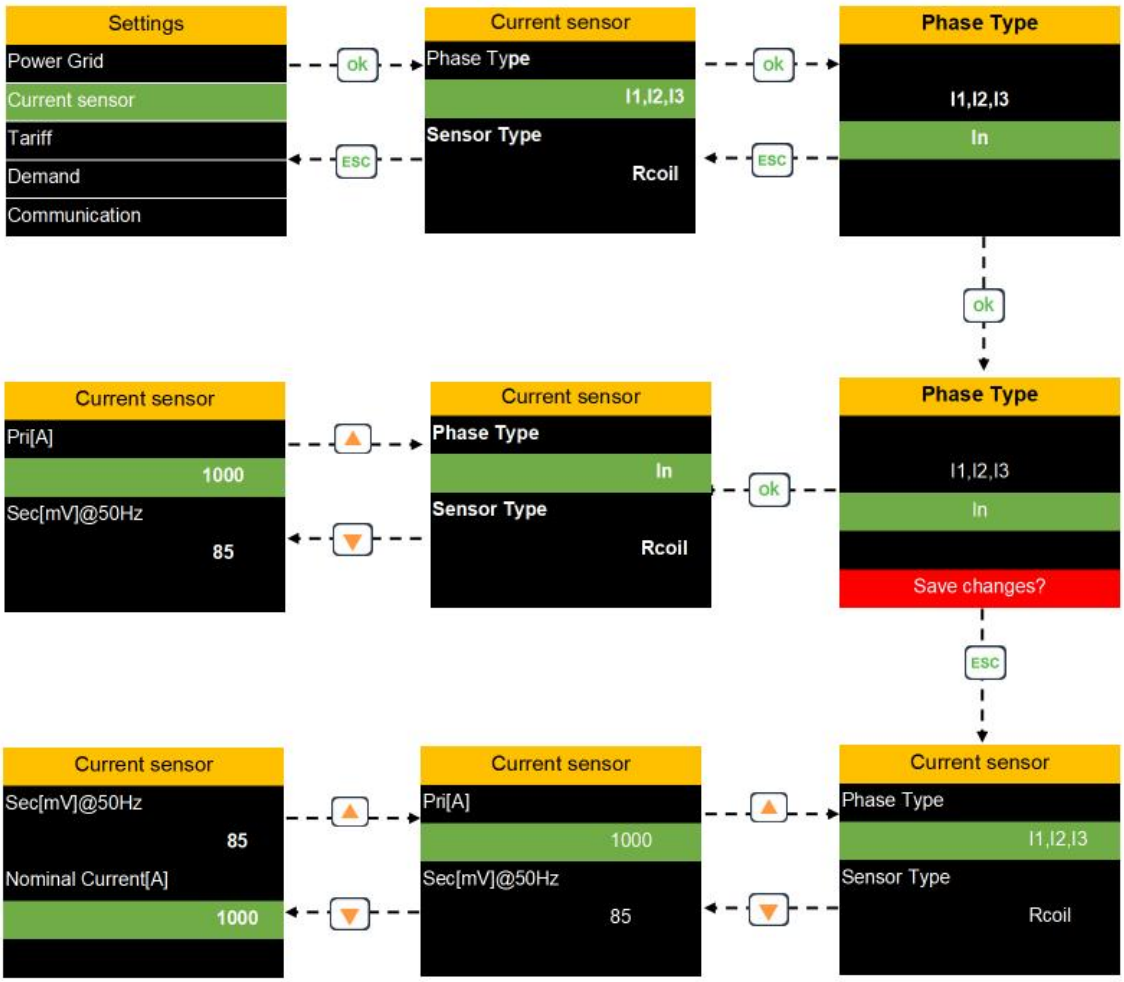

9.4.3 Setting Menu - Zero Drift Suppression

Used to suppress zero offset noise.

The zero drift suppression threshold of voltage [%] and current [%] can be set

Supports setting via the [↑] or [↓], **long press** to shift

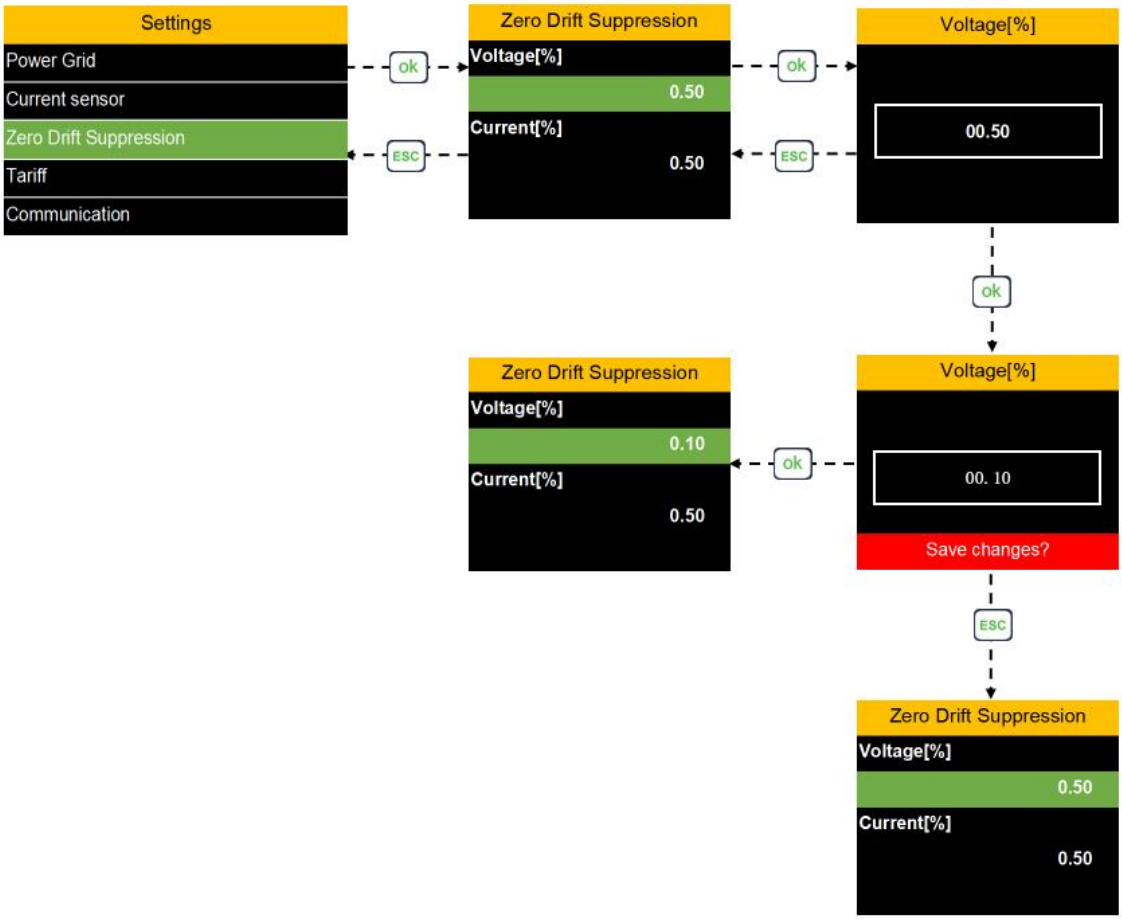

9.4.4 Settings Menu - Tariff

Configure the billing mode and time period tariff.

Parameters	Configuration Instructions
Switch mode	Manual / RTC (Real Time Clock)
Tariff settings	Ta ~ Tf 6 time periods, corresponding to the selected tariff level

Instruction:

RTC mode: set the time and the corresponding tariff (e.g. Ta=07:00 → tariff 1)

Manual mode: only set the selection order of the six tariffs

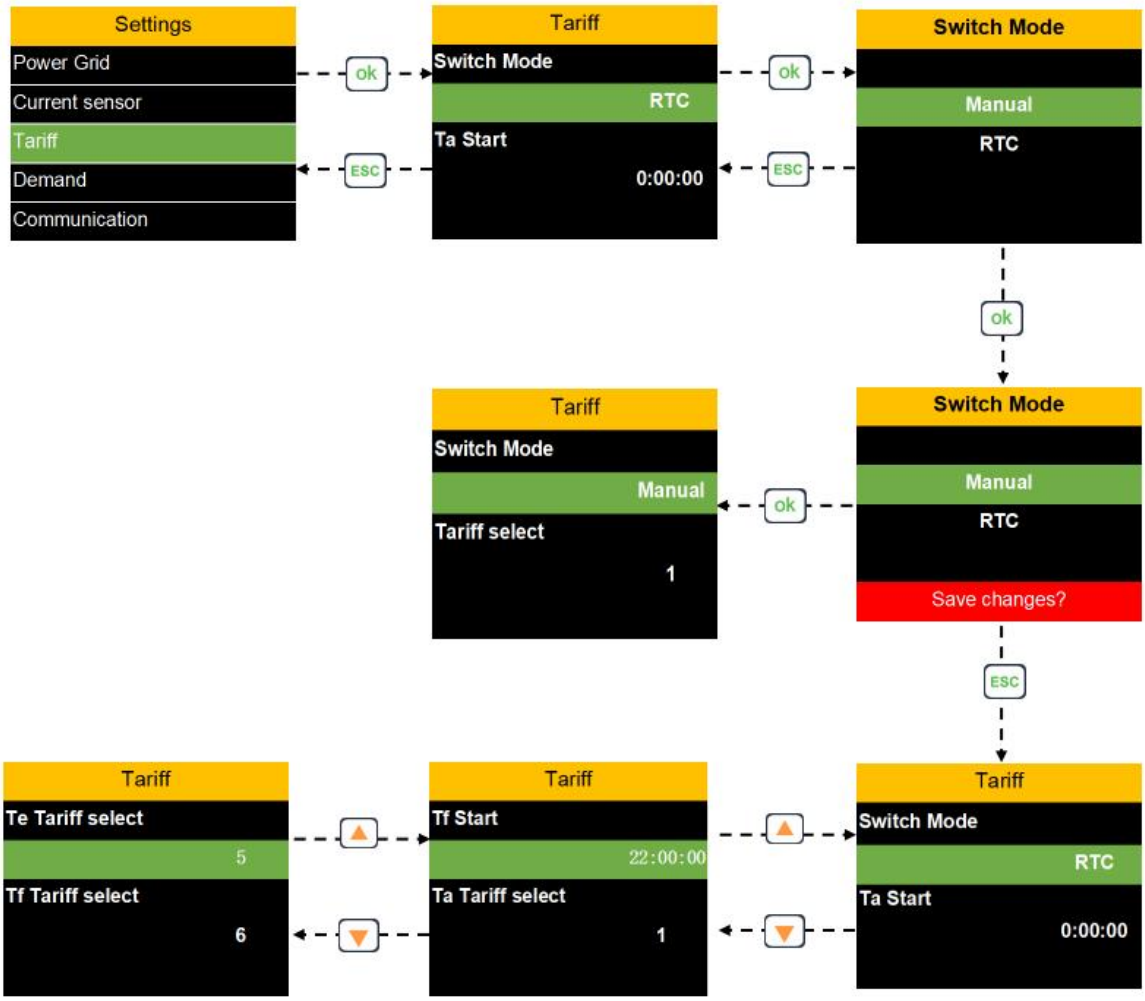

9.4.5 Setting Menu - Demand

Set the demand calculation mode and calculation interval.

Parameters	Configuration Instructions
Calculation method	Fixed: Update at fixed intervals; Sliding: Update every 1 minute
Calculation interval	Range: 1~60 minutes (default 15 minutes)

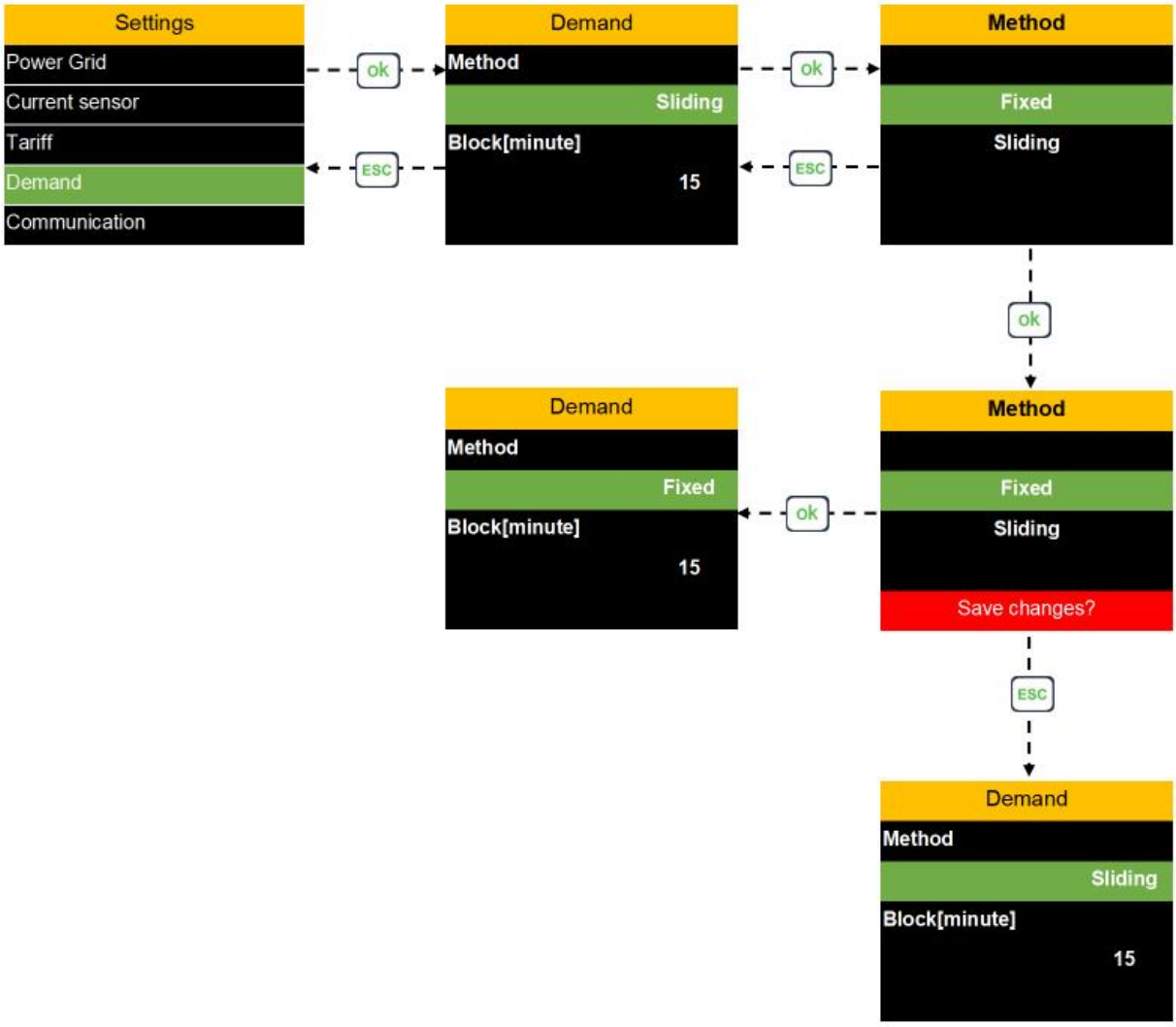

9.4.6 Setting Menu - Communication

Configure the communication interface parameters.

Parameters	Configuration Instructions
Status	Enable / Disable
Device address	Range: 000 ~ 247
Baud rate	Support: 2400 / 4800 / 9600 / 19200 / 38400 / 57600 / 115200
Parity	None / Odd / Even
Stop bit	1 or 2

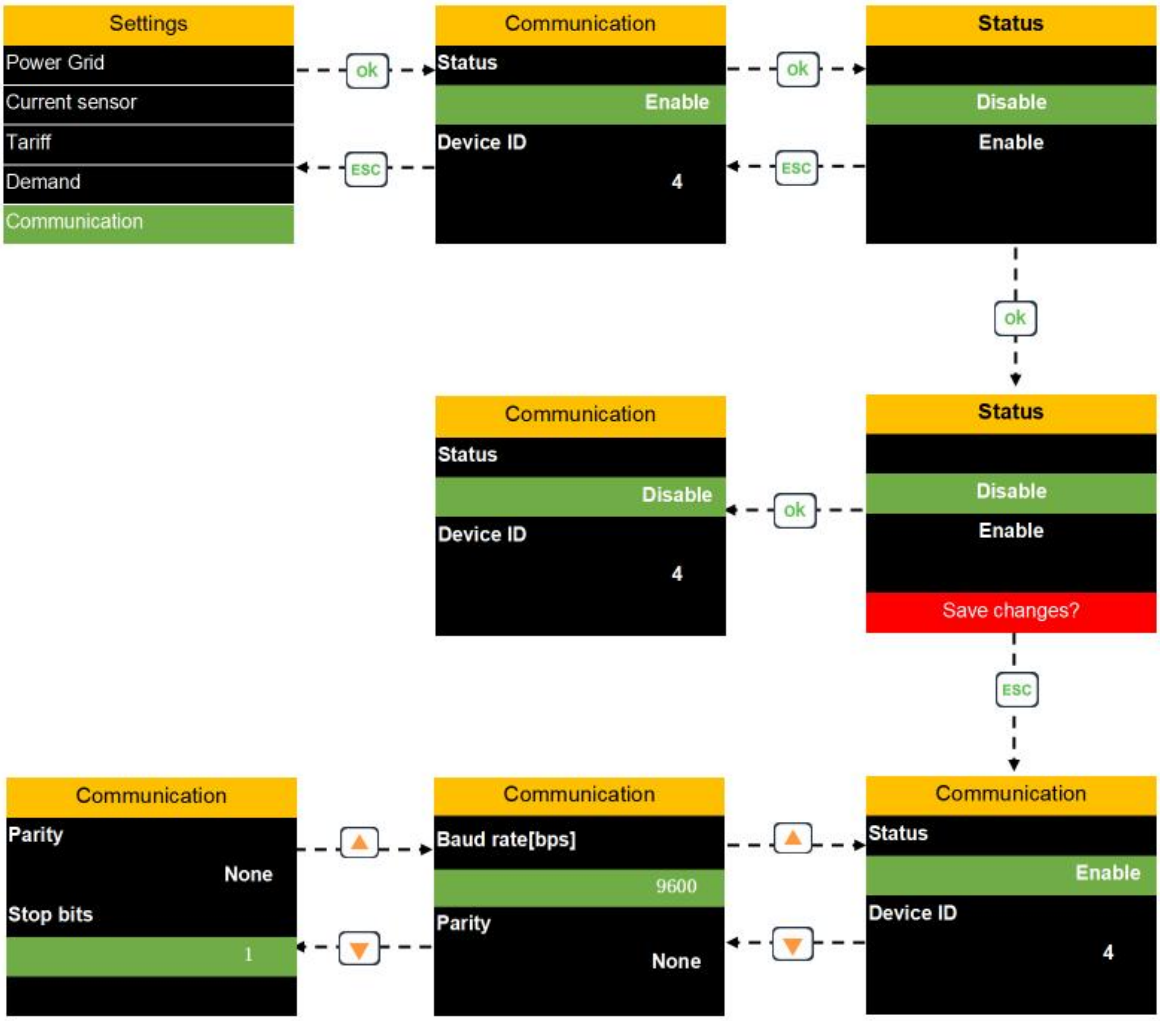

9.4.7 Setting Menu - HMI

Set the human-machine page to display related parameters.

Parameters	Configuration Instructions
Language	中文 / English
Time setting	Year/Month/Day Hour:Minute:Second
Button tone	Enable / Disable
Backlight off	Never / 1~5min
Backlight brightness	Range: 1~5 levels

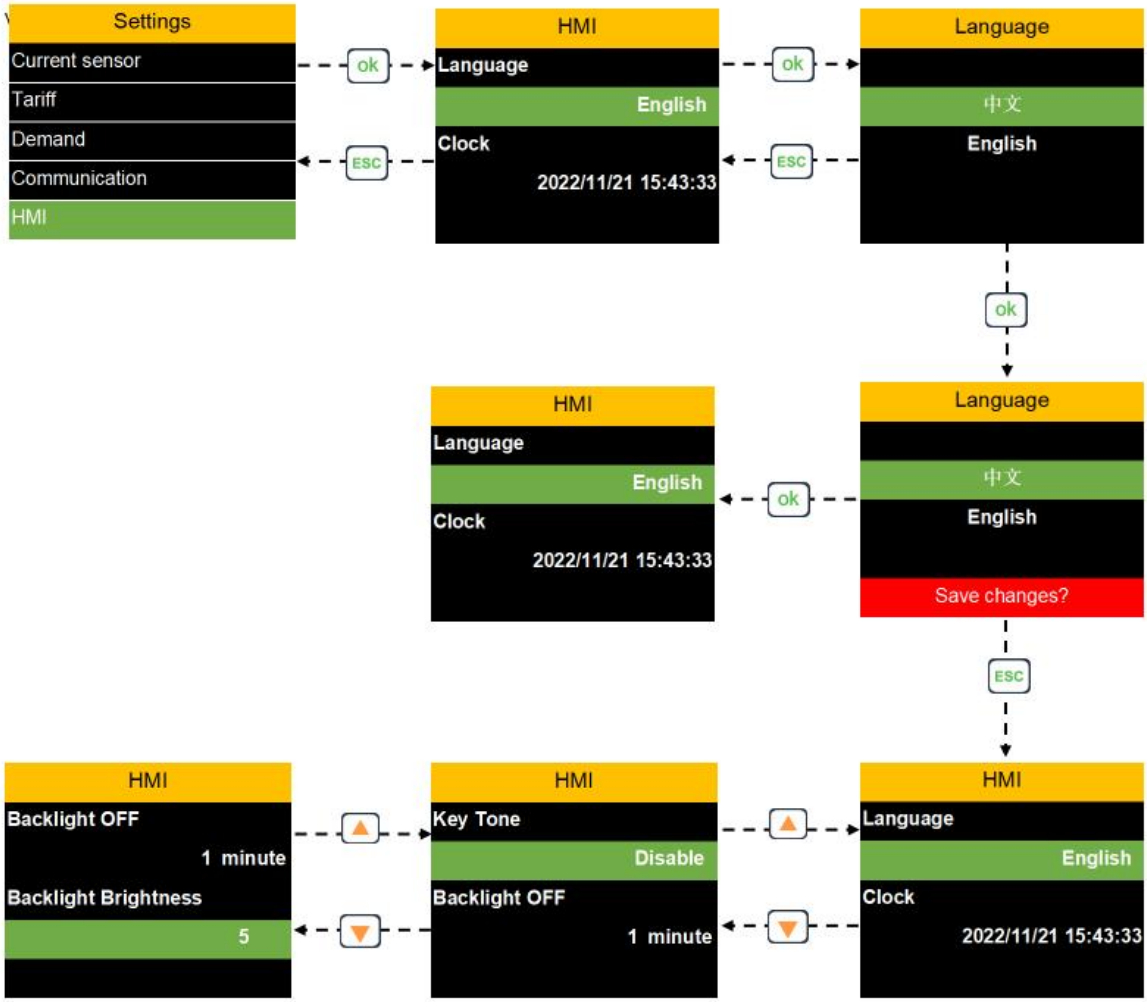

9.4.8 Setting Menu - Password

Set or change the device password.

Parameters	Configuration Instructions
Set password	0001 ~ 9999
Reset password	0001 ~ 9999

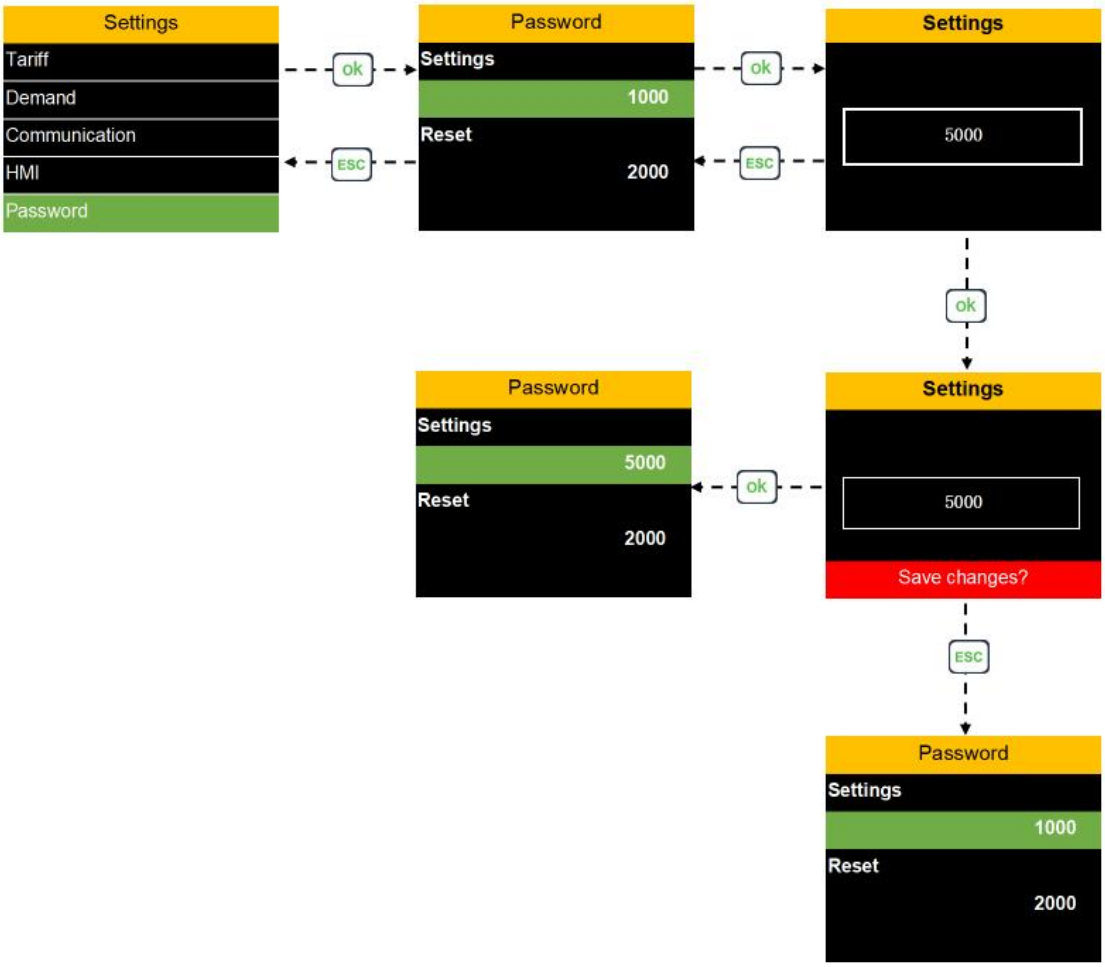

9.5 Reset Menu

The reset menu is used to restore or clear the following historical data and setting parameters:

- Maximum/minimum value recording
- Maximum demand value
- Tariff energy
- Total energy (optional)
- Restore factory settings

Entry method:

Before going to the reset menu, you need to enter the reset password (default value: 2000).

Press [OK] to go to the password input page, use [↑] or [↓] to modify the value, and long press to move the cursor (the current position flashes).

- Password is correct: Press [OK] to go to the reset menu
- Wrong password: Stay on the input page
- Forget the password: Input the last four digits of the device serial number as a temporary password to go to the reset page

Operations:

- Use [↑] or [↓] to switch the items that need to be reset
- Press [OK] to go to the reset confirmation page
- The system will prompt whether to perform the reset operation, press [OK] or [ESC] to confirm or cancel

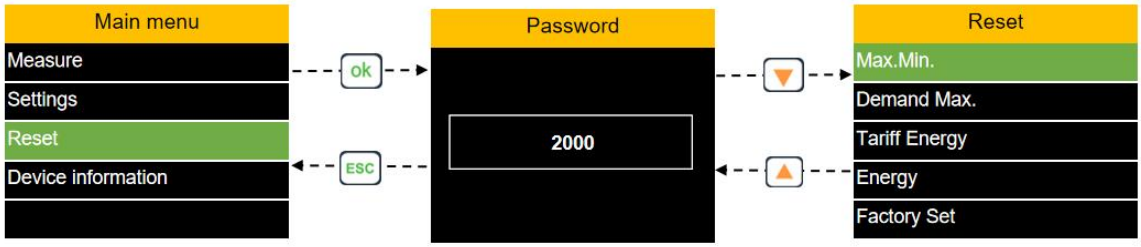

9.6 Device Information Menu

The device information menu is used to view the basic information and current configuration status of the meter, including:

- Device model
- Program version number
- Communication parameters (address, baud rate, parity, etc.)
- Grid parameters (wiring mode, transformation ratio, etc.)
- Current system time

Operations:
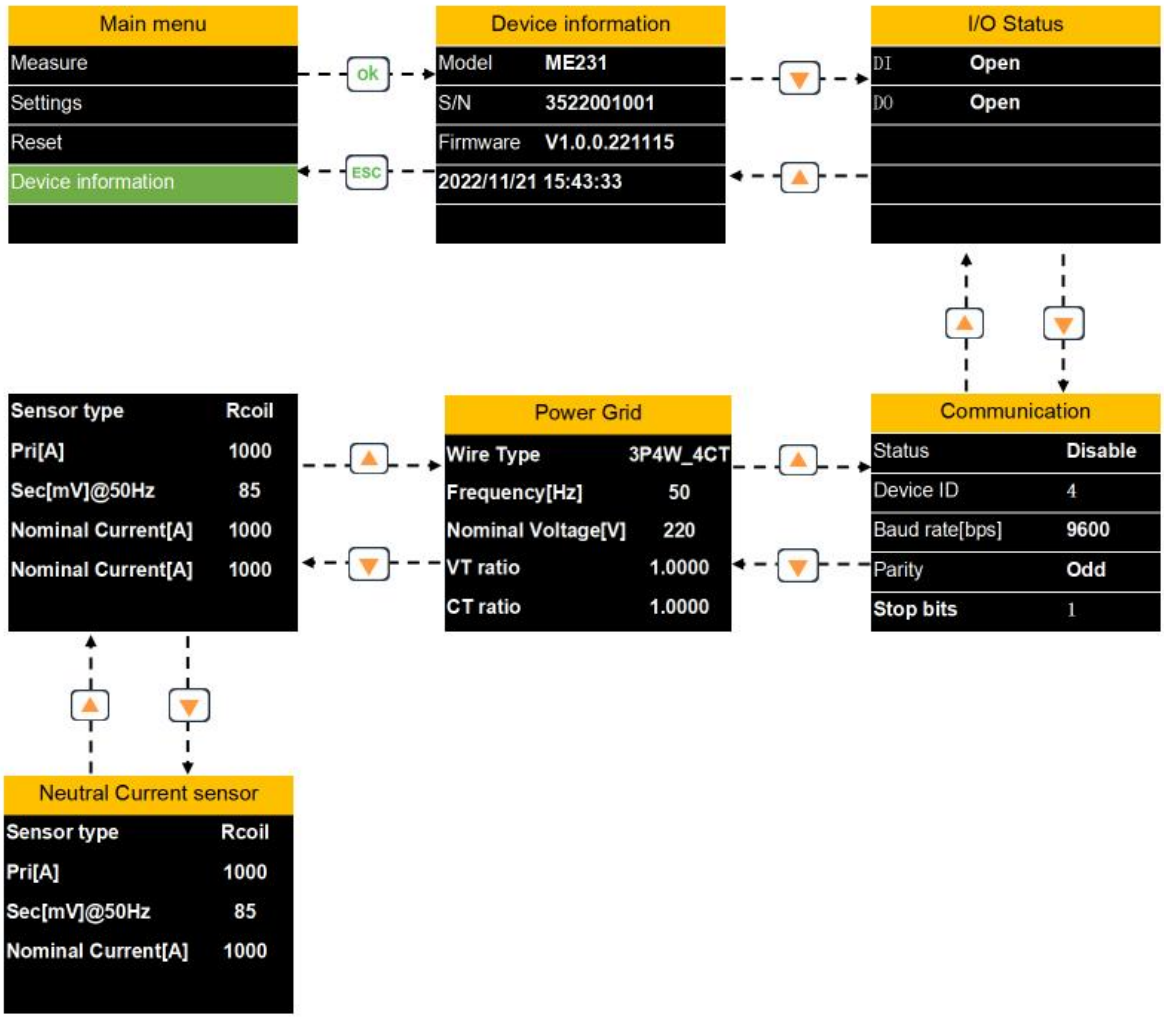
Use [↑] or [↓] to switch information pages and view the parameter information of the device.